VISUAL COMFORT & CO.

COLLIER

DESIGNED BY SEAN LAVIN

COLLIER

DESIGNED BY SEAN LAVIN

Collier exudes luxury and sophistication. Solid faceted crystal from the Czech Republic fully encapsulates integrated LED modules w hich are interlocked by custom engineered solid brass connectors. Pre-determined lengths from 2ft to 20ft facilitate ease of ordering while custom lengths are available through our quotes department.

Collier can be hung straight down in pendant form or draped from two mounting points for a striking chandelier utilizing the surface canopy or more minimal remote driver canopy. Interweave individual stands to create incredible light sculptures with stunning illumination.

Patent Pending.

COLLIER

DESIGNED BY SEAN LAVIN

QUALITY, CONNECTIVITY, CUSTOMIZATION

Available in Natural Brass or Polished Nickel.

Solid faceted crystal manufactured in the Czech Republic.

End caps reflect light back into the crystal and complete the aesthetic.

Custom engineered connectors provide support and continuous illumination.

Complementary detailing can be found through all components.

Individual crystal modules easily connect to create a stunning strand of luxurious LED light.

Available in standard lengths and can also be ordered in alternate lengths through quotes.

Patent Pending.

COLLIER

DESIGNED BY SEAN LAVIN

MOUNTING OPTIONS

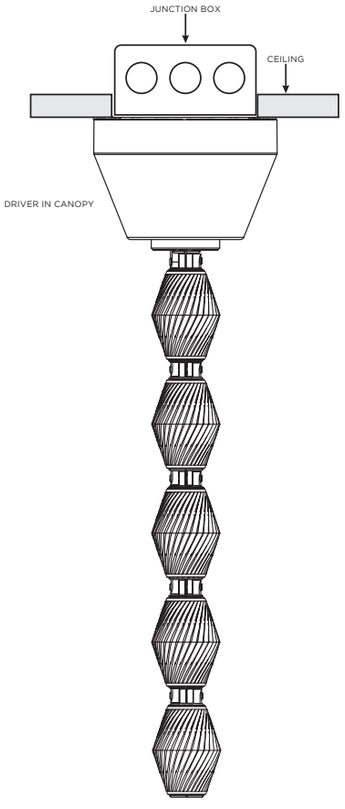

SURFACE MOUNT TRANSFORMER

BASED ON 108" LENGTH STRAND

700CLR108NB-LED927S

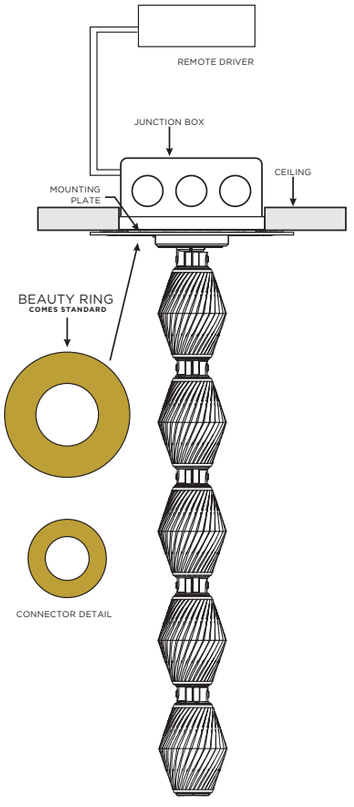

REMOTE MOUNT TRANSFORMER
NO MUD PLATE

BASED ON 108" LENGTH STRAND

700CLR108NB-LED927R

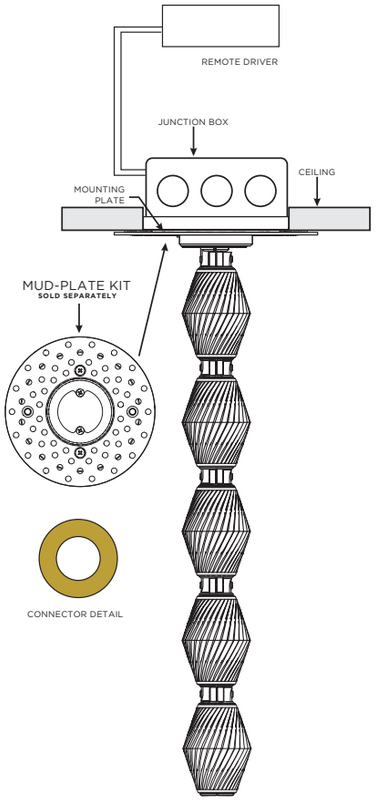

REMOTE MOUNT TRANSFORMER
MUD PLATE KIT

BASED ON 108" LENGTH STRAND

700CLR108NB-LED927R
+
700CLRMDPLTx
SOLD SEPARATELY

DROP LENGTH CONFIGURATION

The Collier Drop Length Table helps guide which length of Collier to specify and how to mount it to achieve a desired drop length or mounting distance. We recommend using a string to confirm the dimensions prior to placing an order, but the following information should help you identify the optimal measurements.

Drop Length (Y*)

MOUNTING DISTANCE (X)	COLLIER PENDANT (ACTUAL LENGTH WITH REMOTE TRANSFORMER AND LOW-WATTAGE SURFACE CANOPY)						
	24" (29.2")	36" (42")	48" (54.7")	84" (92.9")	108" (118.4")	132" (143.9")	240" (258.5")
12"	10.4"	16.8"	23"	41.3"	53.4"	65.5"	119.7"
18"	7.8"	15.1"	21.6"	40.3"	52.5"	64.6"	119"
24"		12.8"	19.9"	39.1"	51.4"	63.6"	118.2"
30"		9.6"	17.7"	37.7"	50.2"	62.5"	117.3"
36"			14.8"	36.1"	48.8"	61.3"	116.4"
42"			11"	34.2"	47.3"	60"	115.3"
48"				32.2"	45.6"	58.5"	114.3"
54"				29.8"	43.8"	56.9"	113.2"
60"				27.1"	41.8"	55.2"	112.0"
66"				23.8"	39.5"	53.4"	110.7"
72"				19.8"	37"	51.3"	109.4"
78"				14.4"	34.2"	49.1"	108"
84"					30.9"	46.8"	106.6"
90"					27.1"	44.1"	105"
96"					22.5"	41.2"	103.5"
102"					16.3"	38"	101.8"
108"						34.3"	100.1"
114"						30"	98.3"
120"						24.8"	96.4"
126"						17.9"	94.4"
132"							92.3"
138"							90.1"
144"							87.9"
150"							85.5"
156"							83"
162"							80.3"
168"							77.5"
174"							74.6"
180"							71.4"
186"							68.1"
192"							64.5"
198"							60.6"
204"							56.4"
210"							51.8"
216"							46.6"
222"							40.6"
228"							33.4"
234"							24"

Remote canopy for all pendants and chandeliers

Mud plate for all pendants and chandeliers

Surface canopy for 24, 35, and 48 pendants

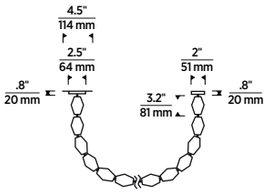

Remote canopy for 84, 108, 132, and 240 chandeliers

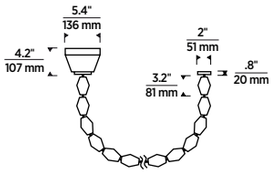

Collier pendant = The length of the strand.

X = The distance between the mounting points on the ceiling.

*Y = The drop length from the ceiling to the lowest point on the curve.

The dimensions given assume the remote transformer and low-wattage surface canopy are used (shown in the image). If the high-wattage surface canopy is used, it will add approximately 2" to the "Y" dimension.

It is strongly recommend that you test with a string before drilling holes in the ceiling or placing junction boxes.

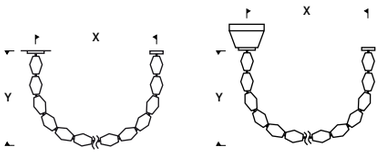

Georgia O'Keeffe Art and Letters
ART HOUSE

COLLIER

DESIGNED BY SEAN LAVIN

COLLIER 24 PENDANT

700CLR24NB-LED927R (REMOTE)
NATURAL BRASS

700CLR24N-LED927R (REMOTE)
POLISHED NICKEL

Remote: H: 29.2" | W: 2" | Canopy: 5" round
Surface: H: 32.6" | W: 2" | Canopy: 5.4" round
Integrated LED | Remote 120V or 277V |
Surface 120V-277V | 8.2W |
452 Lumens | 2700K | 90CRI

COLLIER 36 PENDANT

700CLR36NB-LED927R (REMOTE)
NATURAL BRASS

700CLR36N-LED927R (REMOTE)
POLISHED NICKEL

Remote: H: 42" | W: 2" | Canopy: 5" round
Surface: H: 45.3" | W: 2" | Canopy: 5.4" round
Integrated LED | Remote 120V or 277V |
Surface 120V-277V | 12.3W |
678 Lumens | 2700K | 90CRI

For additional specification information, please refer to specification section or visit techlighting.com

COLLIER

DESIGNED BY SEAN LAVIN

COLLIER 48 PENDANT

700CLR48NB-LED927R (REMOTE)
NATURAL BRASS

700CLR48NB-LED927R (REMOTE)
POLISHED NICKEL

Remote: H: 54.7" | W: 2" | Canopy: 5" round
Surface: H: 58" | W: 2" | Canopy: 5.4" round
Integrated LED | Remote 120V or 277V | Surface 120V-277V | 16.4W | 904 Lumens | 2700K | 90CRI

COLLIER 84 PENDANT

700CLR84NB-LED927R (REMOTE)
NATURAL BRASS

700CLR48NB-LED927R (REMOTE)
POLISHED NICKEL

Remote: H: 92.9" | W: 2" | Canopy: 5" round
Surface: H: 96.3" | W: 2" | Canopy: 5.4" round
Integrated LED | Remote 120V or 277V | Surface 120V-277V | 28.7W | 1582 Lumens | 2700K | 90CRI

For additional specification information, please refer to specification section or visit techlighting.com

COLLIER

DESIGNED BY SEAN LAVIN

COLLIER 108 PENDANT

700CLR108NB-LED927R (REMOTE)
NATURAL BRASS

700CLR108N-LED927R (REMOTE)
POLISHED NICKEL

Remote: H: 118.4" | W: 2" | Canopy: 5" round
Surface: H: 121.7" | W: 2" | Canopy: 5.4" round
Integrated LED | Remote 120V or 277V | Surface 120V-277V | 36.9W | 2064 Lumens | 2700K | 90CRI

For additional specification information, please refer to specification section or visit techlighting.com

COLLIER

DESIGNED BY SEAN LAVIN

COLLIER 132 PENDANT

700CLR132NB-LED927R (REMOTE)
NATURAL BRASS

700CLR132N-LED927R (REMOTE)
POLISHED NICKEL

Remote: H: 143.9" | W: 2" | Canopy: 5" round
Surface: H: 147.2" | W: 2" | Canopy: 5.4" round
Integrated LED | Remote 120V or 277V | Surface 120V-277V | 45.1W | 2486 Lumens | 2700K | 90CRI

For additional specification information, please refer to specification section or visit techlighting.com

COLLIER

DESIGNED BY SEAN LAVIN

COLLIER 240 PENDANT

700CLR240NB-LED927R (REMOTE)
NATURAL BRASS

700CLR240N-LED927R (REMOTE)
POLISHED NICKEL

Remote: H: 258.5" | W: 2" | Canopy: 5" round
Surface: H: 261.8" | W: 2" | Canopy: 5.4" round
Integrated LED | Remote 120V or 277V | Surface 120V-277V | 82W | 4520 Lumens | 2700K | 90CRI

For additional specification information, please refer to specification section or visit techlighting.com

COLLIER

DESIGNED BY SEAN LAVIN

COLLIER SWAG CABLE

700CLRSWAGNB
NATURAL BRASS

700CLRSWAGN
POLISHED NICKEL

H: .8" (7.7" min.-145.7" max. drop) | L: .9" | W: 1.2"

For additional specification information, please refer to specification section or visit techlighting.com

COLLIER ISOLATING CONNECTOR

700CLRISOCNTNB
NATURAL BRASS

700CLRISOCNTN
POLISHED NICKEL

H: .9" | L: 1" | W: .4"

Allows the connection of two 20ft Collier fixtures with
two power sources for a max length of 40'.

For additional specification information, please refer to specification section or visit techlighting.com

COLLIER

DESIGNED BY SEAN LAVIN

COLLIER 15 WALL SCONCE

700WSCLR15NB-LED927
NATURAL BRASS

700WSCLR15N-LED927
POLISHED NICKEL

Finial: H: 17.4" | W: 3.1" | D: 3"
Wall Anchor: H: 14.8" | W: 3.1" | D: 3"
Integrated LED | 120V-277V | 4.1W | 226 Lumens | 2700K | 90CRI

COLLIER 28 WALL SCONCE

700WSCLR28NB-LED927
NATURAL BRASS

700WSCLR28N-LED927
POLISHED NICKEL

Finial: H: 30.2" | W: 3.1" | D: 3"
Wall Anchor: H: 27.6" | W: 3.1" | D: 3"
Integrated LED | 120V-277V | 8.2W | 452 Lumens | 2700K | 90CRI

COLLIER 40 WALL SCONCE

700WSCLR40NB-LED927
NATURAL BRASS

700WSCLR40N-LED927
POLISHED NICKEL

Finial: H: 42.9" | W: 3.1" | D: 3"
Wall Anchor: H: 40.3" | W: 3.1" | D: 3"
Integrated LED | 120V-277V | 12.3W | 678 Lumens | 2700K | 90CRI

COLLIER 53 WALL SCONCE

700WSCLR53NB-LED927
NATURAL BRASS

700WSCLR53N-LED927
POLISHED NICKEL

Finial: H: 55.6" | W: 3.1" | D: 3"
Wall Anchor: H: 53" | W: 3.1" | D: 3"
Integrated LED | 120V-277V | 16.4W | 904 Lumens | 2700K | 90CRI

For additional specification information, please refer to specification section or visit techlighting.com

SPECIFICATIONS

COLLIER 24 PENDANT OR SWAG

P 12

ITEM NUMBER

Natural Brass
700CLR24NB-LED927R (2700K Remote, 120V)
700CLR24NB-LED927R-277 (2700K Remote, 277V)
700CLR24NB-LED927S (2700K Surface)
700CLR24NB-LED930R (3000K Remote, 120V)
700CLR24NB-LED930R-277 (3000K Remote, 277V)
700CLR24NB-LED930S (3000K Surface)
Polished Nickel
700CLR24N-LED927R (2700K Remote, 120V)
700CLR24N-LED927R-277 (2700K Remote, 277V)
700CLR24N-LED927S (2700K Surface)
700CLR24N-LED930R (3000K Remote, 120V)
700CLR24N-LED930R-277 (3000K Remote, 277V)
700CLR24N-LED930S (3000K Surface)

SIZE

Remote: H: 29.2" | W: 2" | Canopy: 5" round
Surface: H: 32.6" | W: 2" | Canopy: 5.4" round

LAMPING

Integrated LED
Voltage: Remote: 120V or 277V | Surface: 120V-277V
Total Watts: 8.2W
Delivered Lumens: 452
CCT: 2700K or 3000K
CRI: 90
Dimmable with most LED compatible ELV, Triac and 0-10V dimmers; 277V compatible with 0-10V dimmers; Surface dimmable with ELV and Triac dimmers

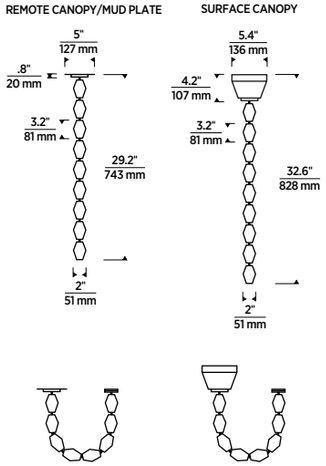

COLLIER 36 PENDANT OR SWAG

P 12

ITEM NUMBER

Natural Brass
700CLR36NB-LED927R (2700K Remote, 120V)
700CLR36NB-LED927R-277 (2700K Remote, 277V)
700CLR36NB-LED927S (2700K Surface)
700CLR36NB-LED930R (3000K Remote, 120V)
700CLR36NB-LED930R-277 (3000K Remote, 277V)
700CLR36NB-LED930S (3000K Surface)
Polished Nickel
700CLR36N-LED927R (2700K Remote, 120V)
700CLR36N-LED927R-277 (2700K Remote, 277V)
700CLR36N-LED927S (2700K Surface)
700CLR36N-LED930R (3000K Remote, 120V)
700CLR36N-LED930R-277 (3000K Remote, 277V)
700CLR36N-LED930S (3000K Surface)

SIZE

Remote: H: 42" | W: 2" | Canopy: 5" round
Surface: H: 45.3" | W: 2" | Canopy: 5.4" round

LAMPING

Integrated LED
Voltage: Remote: 120V or 277V | Surface: 120V-277V
Total Watts: 12.3W
Delivered Lumens: 678
CCT: 2700K or 3000K
CRI: 90
Dimmable with most LED compatible ELV, Triac and 0-10V dimmers; 277V compatible with 0-10V dimmers; Surface dimmable with ELV and Triac dimmers

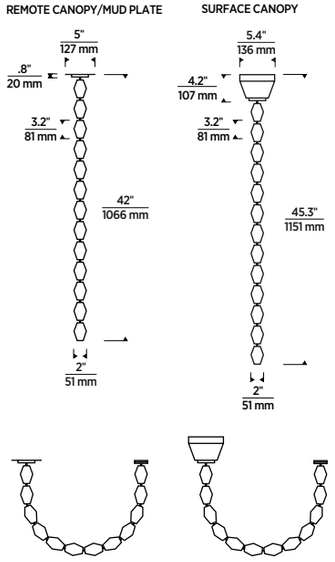

COLLIER 48 PENDANT OR SWAG

P 13

ITEM NUMBER

Natural Brass
700CLR48NB-LED927R (2700K Remote, 120V)
700CLR48NB-LED927R-277 (2700K Remote, 277V)
700CLR48NB-LED927S (2700K Surface)
700CLR48NB-LED930R (3000K Remote, 120V)
700CLR48NB-LED930R-277 (3000K Remote, 277V)
700CLR48NB-LED930S (3000K Surface)
Polished Nickel
700CLR48N-LED927R (2700K Remote, 120V)
700CLR48N-LED927R-277 (2700K Remote, 277V)
700CLR48N-LED927S (2700K Surface)
700CLR48N-LED930R (3000K Remote, 120V)
700CLR48N-LED930R-277 (3000K Remote, 277V)
700CLR48N-LED930S (3000K Surface)

SIZE

Remote: H: 54.7" | W: 2" | Canopy: 5" round
Surface: H: 58" | W: 2" | Canopy: 5.4" round

LAMPING

Integrated LED
Voltage: Remote: 120V or 277V | Surface: 120V-277V
Total Watts: 16.4W
Delivered Lumens: 904
CCT: 2700K or 3000K
CRI: 90
Dimmable with most LED compatible ELV, Triac and 0-10V dimmers; 277V compatible with 0-10V dimmers; Surface dimmable with ELV and Triac dimmers

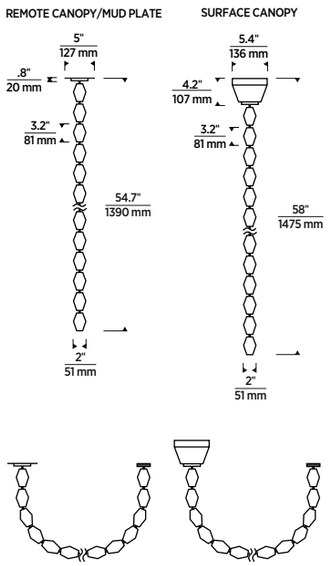

COLLIER 84 PENDANT OR SWAG

P 13

ITEM NUMBER

Natural Brass
700CLR84NB-LED927R (2700K Remote, 120V)
700CLR84NB-LED927R-277 (2700K Remote, 277V)
700CLR84NB-LED927S (2700K Surface)
700CLR84NB-LED930R (3000K Remote, 120V)
700CLR84NB-LED930R-277 (3000K Remote, 277V)
700CLR84NB-LED930S (3000K Surface)
Polished Nickel
700CLR84N-LED927R (2700K Remote, 120V)
700CLR84N-LED927R-277 (2700K Remote, 277V)
700CLR84N-LED927S (2700K Surface)
700CLR84N-LED930R (3000K Remote, 120V)
700CLR84N-LED930R-277 (3000K Remote, 277V)
700CLR84N-LED930S (3000K Surface)

SIZE

Remote: H: 92.9" | W: 2" | Canopy: 5" round
Surface: H: 96.3" | W: 2" | Canopy: 5.4" round

LAMPING

Integrated LED
Voltage: Remote: 120V or 277V | Surface: 120V-277V
Total Watts: 28.7W
Delivered Lumens: 1582
CCT: 2700K or 3000K
CRI: 90
Dimmable with most LED compatible ELV, Triac and 0-10V dimmers; 277V compatible with 0-10V dimmers; Surface dimmable with ELV and Triac dimmers

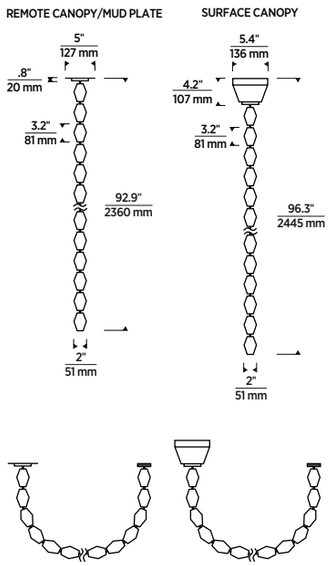

PRODUCT SPECIFICATIONS

COLLIER

COLLIER 108 PENDANT OR SWAG

P 14

ITEM NUMBER

Natural Brass

700CLR108NB-LED927R (2700K Remote, 120V)
700CLR108NB-LED927R-277 (2700K Remote, 277V)
700CLR108NB-LED927S (2700K Surface)
700CLR108NB-LED930R (3000K Remote, 120V)
700CLR108NB-LED930R-277 (3000K Remote, 277V)
700CLR108NB-LED930S (S 3000K urface)

Polished Nickel

700CLR108N-LED927R (2700K Remote, 120V)
700CLR108N-LED927R-277 (2700K Remote, 277V)
700CLR108N-LED927S (2700K Surface)
700CLR108N-LED930R (3000K Remote, 120V)
700CLR108N-LED930R-277 (3000K Remote, 277V)
700CLR108N-LED930S (3000K Surface)

SIZE

Remote: H: 118.4" | W: 2" | Canopy: 5" round
Surface: H: 121.7" | W: 2" | Canopy: 5.4" round

LAMPING

Integrated LED
Voltage: Remote: 120V or 277V | Surface: 120V-277V
Total Watts: 36.9W
Delivered Lumens: 2064
CCT: 2700K or 3000K
CRI: 90
Dimmable with most LED compatible ELV, Triac and 0-10V dimmers; 277V compatible with 0-10V dimmers; Surface dimmable with ELV and Triac dimmers

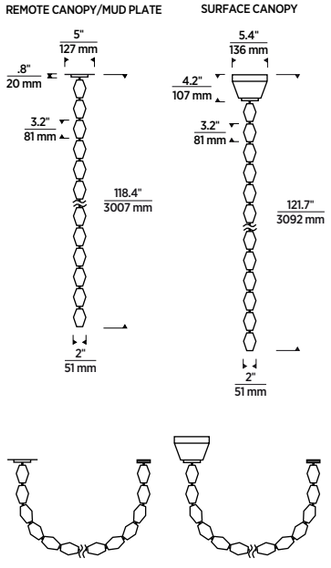

COLLIER 132 PENDANT OR SWAG

P 16

ITEM NUMBER

Natural Brass

700CLR132NB-LED927R (2700K Remote, 120V)
700CLR132NB-LED927R-277 (2700K Remote, 277V)
700CLR132NB-LED927S (2700K Surface)
700CLR132NB-LED930R (3000K Remote, 120V)
700CLR132NB-LED930R-277 (3000K Remote, 277V)
700CLR132NB-LED930S (3000K Surface)

Polished Nickel

700CLR132N-LED927R (2700K Remote, 120V)
700CLR132N-LED927R-277 (2700K Remote, 277V)
700CLR132N-LED927S (2700K Surface)
700CLR132N-LED930R (3000K Remote, 120V)
700CLR132N-LED930R-277 (3000K Remote, 277V)
700CLR132N-LED930S (3000K Surface)

SIZE

Remote: H: 143.9" | W: 2" | Canopy: 5" round
Surface: H: 147.2" | W: 2" | Canopy: 5.4" round

LAMPING

Integrated LED
Voltage: Remote: 120V or 277V | Surface: 120V-277V
Total Watts: 45.1W
Delivered Lumens: 2486
CCT: 2700K or 3000K
CRI: 90
Dimmable with most LED compatible ELV, Triac and 0-10V dimmers; 277V compatible with 0-10V dimmers; Surface dimmable with ELV and Triac dimmers

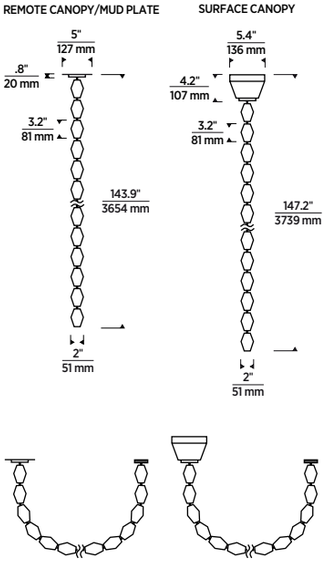

COLLIER 240 PENDANT OR SWAG

P 18

ITEM NUMBER

Natural Brass

700CLR240NB-LED927R (2700K Remote, 120V)
700CLR240NB-LED927R-277 (2700K Remote, 277V)
700CLR240NB-LED927S (2700K Surface)
700CLR240NB-LED930R (3000K Remote, 120V)
700CLR240NB-LED930R-277 (3000K Remote, 277V)
700CLR240NB-LED930S (3000K Surface)

Polished Nickel

700CLR240N-LED927R (2700K Remote, 120V)
700CLR240N-LED927R-277 (2700K Remote, 277V)
700CLR240N-LED927S (2700K Surface)
700CLR240N-LED930R (3000K Remote, 120V)
700CLR240N-LED930R-277 (3000K Remote, 277V)
700CLR240N-LED930S (3000K Surface)

SIZE

Remote: H: 258.5" | W: 2" | Canopy: 5" round
Surface: H: 261.8" | W: 2" | Canopy: 5.4" round

LAMPING

Integrated LED
Voltage: Remote: 120V or 277V | Surface: 120V-277V
Total Watts: 82W
Delivered Lumens: 4520
CCT: 2700K or 3000K
CRI: 90
Dimmable with most LED compatible ELV, Triac and 0-10V dimmers; 277V compatible with 0-10V dimmers; Surface dimmable with ELV and Triac dimmers

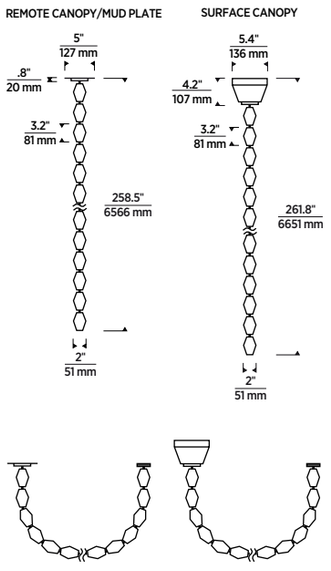

COLLIER SWAG CABLE

P 20

ITEM NUMBER

Natural Brass

700CLRSWAGNB

Polished Nickel

700CLRSWAGN

SIZE

H: .8" (7.7" min. - 145.7" max.) | L: .9" | W: 1.2"

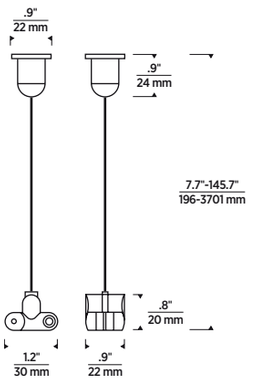

COLLIER ISOLATING CONNECTOR

P 14

ITEM NUMBER
Natural Brass
700CLRISOCNTNB
Polished Nickel
700CLRISOCNTN

SIZE
H: .9" | L: 1" | W: .4"
Allows the connection of two 20 ft Collier fixtures with two power sources for a max length of 40'

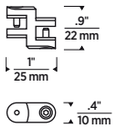

COLLIER 15 WALL SCONCE

P 21

ITEM NUMBER
Natural Brass
700WSCLR15NB-LED927 (2700K)
700WSCLR15NB-LED930 (3000K)
Polished Nickel
700WSCLR15N-LED927 (2700K)
700WSCLR15N-LED930 (3000K)

SIZE
Finial: H: 17.4" | W: 3.1" | D: 3"
Wall Anchor: H: 14.8" | W: 3.1" | D: 3"

LAMPING
Integrated LED
Voltage: 120V-277V
Total Watts: 4.1W
Delivered Lumens: 226
CCT: 2700K or 3000K
CRI: 90
Dimmable with most LED compatible
ELV, Triac and 0-10V dimmers

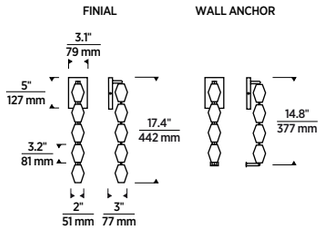

COLLIER 28 WALL SCONCE

P 21

ITEM NUMBER
Natural Brass
700WSCLR28NB-LED927 (2700K)
700WSCLR28NB-LED930 (3000K)
Polished Nickel
700WSCLR28N-LED927 (2700K)
700WSCLR28N-LED930 (3000K)

SIZE
Finial: H: 30.2" | W: 3.1" | D: 3"
Wall Anchor: H: 27.6" | W: 3.1" | D: 3"

LAMPING
Integrated LED
Voltage: 120V-277V
Total Watts: 8.2W
Delivered Lumens: 452
CCT: 2700K or 3000K
CRI: 90
Dimmable with most LED compatible
ELV, Triac and 0-10V dimmers

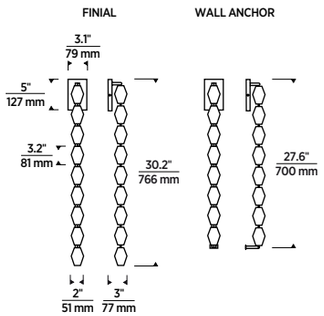

COLLIER 40 WALL SCONCE

P 21

ITEM NUMBER
Natural Brass
700WSCLR36NB-LED927 (2700K)
700WSCLR36NB-LED930 (3000K)
Polished Nickel
700WSCLR36N-LED927 (2700K)
700WSCLR36N-LED930 (3000K)

SIZE
Finial: H: 42.9" | W: 3.1" | D: 3"
Wall Anchor: H: 40.3" | W: 3.1" | D: 3"

LAMPING
Integrated LED
Voltage: 120V-277V
Total Watts: 12.3W
Delivered Lumens: 678
CCT: 2700K or 3000K
CRI: 90
Dimmable with most LED compatible
ELV, Triac and 0-10V dimmers

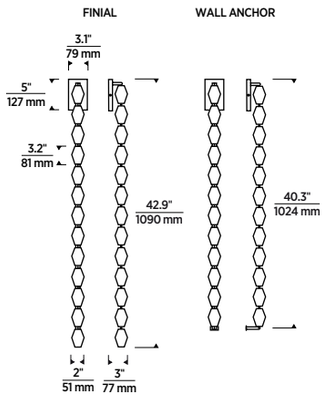

PRODUCT SPECIFICATIONS

COLLIER

COLLIER 53 WALL SCONCE

P 21

ITEM NUMBER
Natural Brass
700WSCLR48NB-LED927 (2700K)
700WSCLR48NB-LED930 (3000K)
Polished Nickel
700WSCLR48N-LED927 (2700K)
700WSCLR48N-LED930 (3000K)

SIZE
Finial: H: 55.6" | W: 3.1" | D: 3"
Wall Anchor: H: 53" | W: 3.1" | D: 3"

LAMPING
Integrated LED
Voltage: 120V-277V
Total Watts: 16.4W
Delivered Lumens: 904
CCT: 2700K or 3000K
CRI: 90
Dimmable with most LED compatible
ELV, Triac and 0-10V dimmers

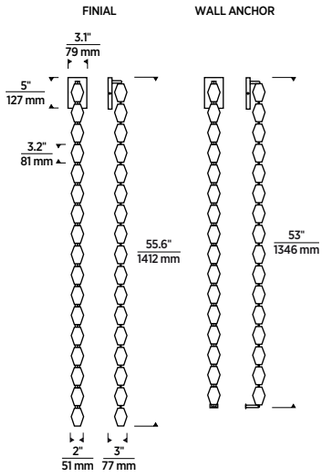

VISUAL COMFORT & CO.

7400 Linder Avenue
Skokie, IL 60077

Phone: 847.410.4400
techlighting.com | @techlighting_official | #techlighting

© 2022 Visual Comfort & Co.

TLCOLLIER22